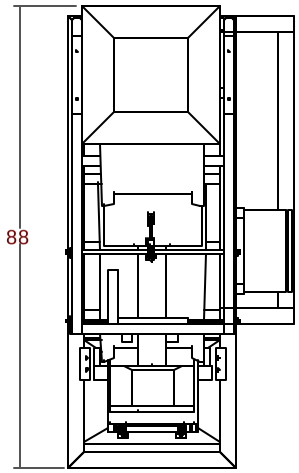

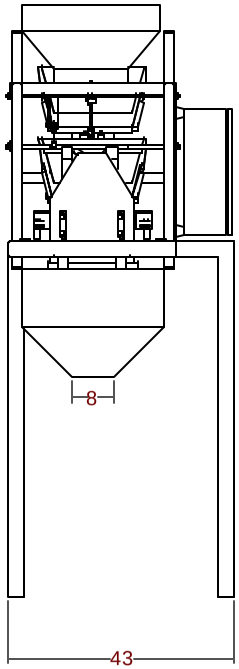

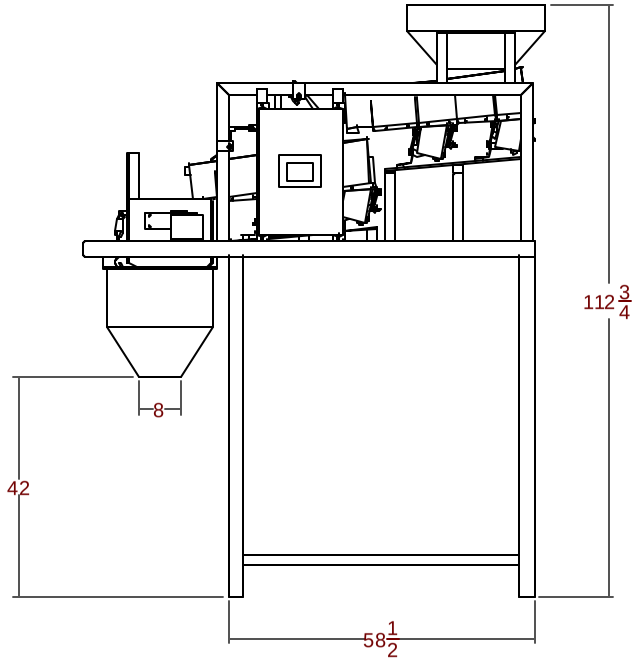

DRAWN M Marchand	8/30/2005	Ohlson Packaging
CHECKED		TITLE
QA		1XL2
MFG		
APPROVED		SIZE C / DWG NO 1XL2 / REV
		SCALE / SHEET 1 OF 1